PRODUCT DATASHEET | IL-D29DALI2

DRIVER LED UNIVERSAL DALI2 250 TO 600MA/25W



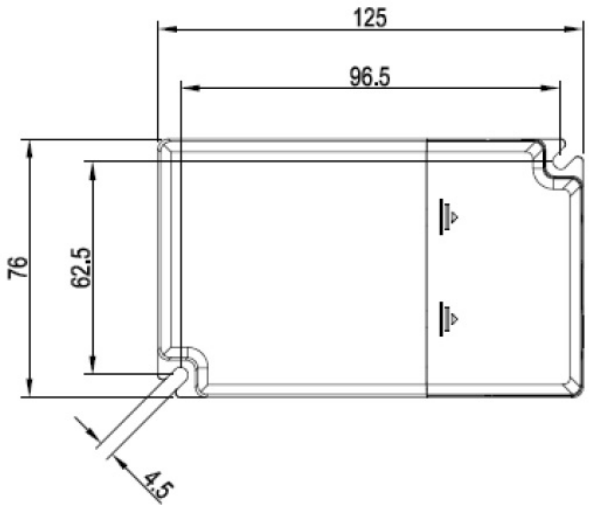



OUTPUT		
Voltage	Current	Power
14-42V	250mA	10.5W
	300mA	12.6W
	350mA	14.7W
	400mA	16.8W
	450mA	18.9W
	500mA	21.0W
	550mA	23.1W
	600mA	25.2W

DIPSWITCH				
1	2	3	4	5
-	-	-	-	-
ON	-	-	-	-
-	ON	-	-	-
ON	ON	-	-	-
-	-	ON	-	-
ON	-	ON	-	-
-	ON	ON	-	-
ON	ON	ON	-	-



DESCRIPTION

Interlight's multifunction driver is a true all-rounder. The driver features dip switches to select different mA values, so you can easily set the driver to the appropriate output for your fixture. In addition, the driver is dimmable in multiple ways: DALI2 dimmable, 0-10V dimmable and push-dim. The driver has plenty of connection space thanks to its spacious construction and is equipped with convenient push terminals so that drivers can be quickly set up and connected. The driver has a flicker rate lower than 3%. Flicker (vibrations in light) can cause headaches, concentration problems and even seizures. By choosing a no-flicker driver, you avoid these problems. Especially in situations where people use lighting for many hours a day, such as in offices, hospitals and schools, a no-flick driver is a must. The driver is ENEC certified, which means that all components, the complete product and the factory meet the demanding requirements. ENEC is the European mark of high quality for electrical products that shows that it meets the European standards (EN). See www.enec.com for more info. Dimmable according to the CCR (Constant Current Reduction) principle.

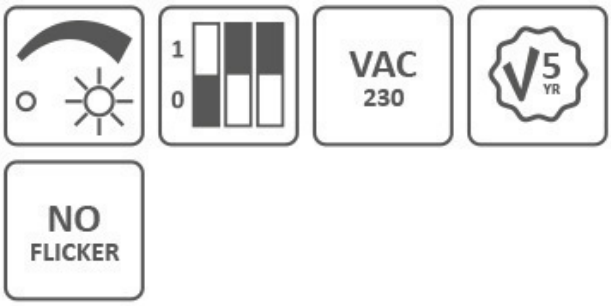

SPECIFICATIONS

Brand:	Interlight
Product type:	Dali2
Model:	Dynamic
Dimmable:	Yes
Dimmable 0-10 V:	Yes
Dimmable DALI:	Yes
Dimmable Dali-2:	Yes
Dimming programmable:	Yes
Dimmable with push-button:	Yes
Housing:	Plastic housing
Suitable for constant current:	Yes
Suitable for constant voltage:	Yes
Output voltage:	14 - 42 V
Output Current:	250 - 600 mA
Suitable for direct voltage (primary side):	Yes
Output power:	10 - 25 W
Input voltage:	220 - 240 V
Overload protection:	Yes
Overtemperature protection:	Yes
Ambient temperature:	-20 - 45 °C
Short circuit protection:	Yes
Degree of protection (IP):	IP20
Protection class according to IEC 61140:	II
Operating device life:	50000 h
Length:	125 mm
Width:	76 mm
Height:	30 mm

ACCESSORIES

Article	Description
IL-DBOX	Connection box for DALI2 driver
IL-S50W	Connection cable 2x0.75mm2 50cm black for GST18i3
2811 020	Connecting cable 2.0m H03VVH2-F2x0.75mm2 black Euro 2.5A/250V

DOWNLOADS AVAILABLE FROM WEBSITE

CE declaration
Circuit breaker
Certificates
Datasheet
Manual