PRODUCT DATASHEET | IL-ED8K3D

EASYFIT LED DOWNLIGHT 20W Ø245MM 3,000K EX. DRIVER





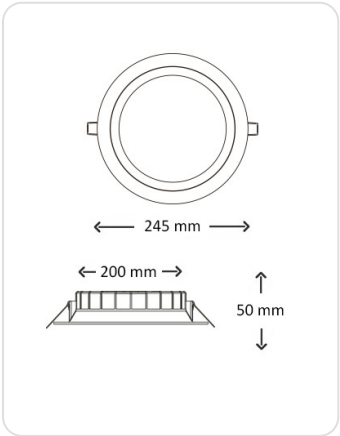

DESCRIPTION

INTERLight's EasyFit downlights are easy to install and the design provides a comfortable and soothing lighting experience. The design creates a calm light image because the LED engine is located deep inside the fixture, making the glare factor low. Ideal (as a replacement downlight) for in meeting centers and general and traffic areas. Comes without driver. Choose an Easyfit driver or set the Dip Switch driver to max. 500 mA. If you choose a driver other than the EasyFit (IL-EDD) or a DALI2 driver, keep in mind that you will need a coupling cord (IL-S20FF). Want this size downlight but less light, without using a dimmer? Then choose one of the drivers of the smaller Easyfit downlights (IL-EDD3D, IL-EDD4D or IL-EDD6D). It is possible to have the connection cord mounted to the driver. Please contact us and ask about the possibilities. Color: RAL9016



SPECIFICATIONS

Brand:	Interlight
Product type:	Downlight
Suitable for surface mounting:	No
Suitable for flush mounting:	Yes
Suitable for wall mounting:	No
Suitable for wall mounting:	No
Suitable for pendulum suspension:	No
With presence detector:	No
Suitable for ceiling mounting:	Yes
Suitable for truss mounting:	No
Suitable for pedestal/floor mounting:	No
Suitable for power rail mounting:	No
Suitable for clamp mounting:	No
Suitable for low voltage cable system:	No
Adjustability:	Not adjustable
Led nom. current at constant current :	500 mA
With motion sensor:	No
With light sensor:	No
Nom. current :	500 mA
Lamp type:	LED not interchangeable
With light source:	Yes
Suitable for number of light sources:	1
Interchangeable ballasts:	Yes
Lampholder:	Other
Housing material:	Plastic
Surface protection:	Lacquered
Dimmable 1-10 V:	Yes

Housing color:	White
Dimmable Dali-2:	Yes
Material cover:	Plastic matte/satinized
Surface brushed:	No
Voltage type:	AC
Ballast:	LED control current-controlled
Driver included:	No
Dimming dependent on driver:	Yes
Dimmable:	Yes
Dimmable phase cut:	Yes
Dimmable phase cut:	Yes
Reflector:	No
Light distributor:	Diffuser lens/optics/panel
Light distribution:	Symmetrical
Reflector color:	White
Beam angle:	>80° - Extremely wide beam
Light outlet:	Direct
Energy efficiency class of the built-in lamp:	A++, A+, A (LED)
Degree of protection (IP):	IP44
Impact resistance:	IK02
Protection class according to IEC 61140:	II
Nom. ambient temperature according to IEC62722-2-1 :	-10 - 40 °C
Suitable for lamp power:	20 W
Max system power:	20 W
Luminous flux:	2000 lm
Effective luminous flux according to IEC 62722-2-1:	2000 lm
Specific luminous flux lamp:	100 lm/W
Light color:	White
Color temperature:	3000 K

Light color adjustable:	No
Color rendering index:	90-100
Effective luminous flux according to IEC 62722-2-1:	2000 lm
Luminous flux adjustable:	No
Specific luminous flux luminaire:	100 lm/W
Power factor:	0.9
Installation diameter:	200 mm
Width:	245 mm
Height/depth:	50 mm
Outer diameter:	245 mm
Type of wiring:	End
Number of poles:	2
Connection method:	Plug clamp
Specific luminous flux luminaire:	100 lm/W
Photobiological safety in accordance with EN 62471:	RG0
Cover fixture with thermal insulation material possible:	No
Color consistency (McAdam ellipse):	SDCM1
UGR level (Unified Glare Rating):	<= 25

ACCESSORIES

Article	Description
IL-X4D20PO2	Driver led 20W 500mA/230V non dimmable + 2 pole Euro
IL-X4D20PO3	Driver led 20W 500mA/230V non dimmable + 3 poles for GST18i3
IL-X4D20WI3	Driver led 20W 500mA/230V non dimmable + 2 pole Wieland
IL-X4D20WA3	Driver led 20W 500mA/230V non dimmable + 3 pole Wago
IL-DT29	Thinq led driver dip switch 250 to 600mA
IL-DCISET+	Emergency lighting module with inverter and battery 3,000mAh
IL-D29DALI2	Driver led universal DALI2 250 to 600mA/25W
IL-D14DALI2L	Driver led universal DALI2 120 to 350mA/14W loopable
IL-X2D40-1-10	Driver led dip switch 400 to 1,100mA 1-10V dimmable
IL-EDD8D	Easyfit led driver 20W 500mA/230V dimmable
IL-EDD6D	Easyfit led driver 15W 350mA/230V dimmable
IL-EDD4D	Easyfit led driver 11W 250mA/230V dimmable
IL-EDD3D	Easyfit led driver 8W 180mA/230V dimmable
IL-X4D20	Driver led 20W 500mA/230V not dimmable
IL-S50W	Connection cable 2x0.75mm2 50cm black for GST18i3
IL-S20FF	Coupling cable white 200mm female - female round
2811 020	Connecting cable 2.0m H03VVH2-F2x0.75mm2 black Euro 2.5A/250V

DOWNLOADS AVAILABLE FROM WEBSITE

Dimtest
CE declaration
LDT-File
Lumen output
Manual