**PRODUCT DATASHEET** | PWCIP68

POWER IP68 CONNECTOR



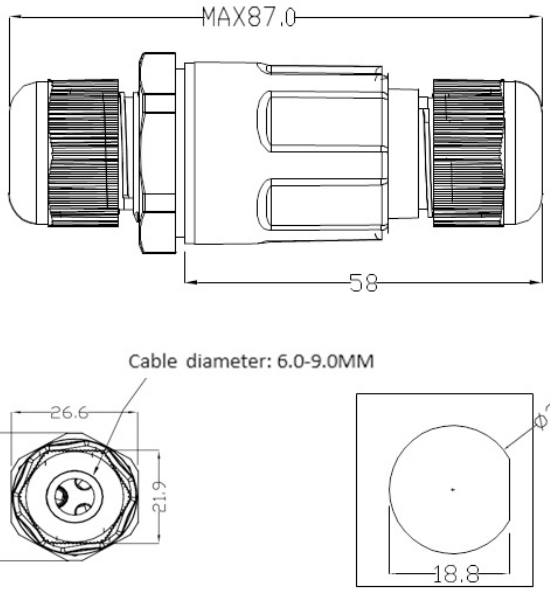






## DESCRIPTION

This 8.5cm Power cable connector is perfect for electrical installations in outdoor environments. Designed for both indoor and outdoor use, the connector provides full protection against water and dust. It is ideal for establishing waterproof connections, such as for power cables in outdoor areas. This connector is specifically designed for cables with a cross section of 0.5 to 2.5 mm², where the outer diameter of the cable must be between 6.0 and 9.0 mm.
Making the connection is easy, as the cable connector functions as a crown connector with a screw connection. The cable wires are inserted into the connector and screwed securely for a reliable connection.

## SPECIFICATIONS

| | |
|---|---|
| **Brand:** | Power |
| **Product type:** | IP68 Connector |
| **Type of insulation material:** | Plastic |
| **Suitable for:** | H07RN-F |

## DOWNLOADS AVAILABLE FROM WEBSITE

Datasheet