PRODUCT DATASHEET | IL-DT29

THINQ LED DRIVER DIP SWITCH 250 TO 600MA



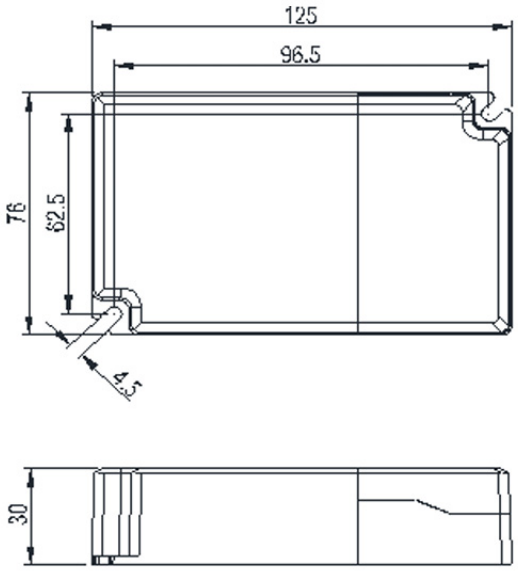

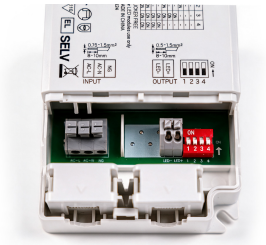



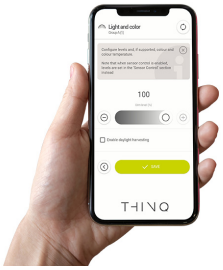

OUTPUT			DIPSWITCH			
Voltage	Current	Power	1	2	3	4
14-42V	250mA	10.5W	-	-	-	-
	300mA	12.6W	ON	-	-	-
	350mA	14.7W	-	ON	-	-
	400mA	16.8W	ON	ON	-	-
	450mA	18.9W	-	-	ON	-
	500mA	21.0W	ON	-	ON	-
	550mA	23.1W	-	ON	ON	-
	600mA	25.2W	ON	ON	ON	-

DESCRIPTION

When you choose Interlight Thinq, you have a complete lighting control system that is scalable and future-proof. The Thinq drivers feature a Thinq node that allows you to easily make each fixture smart. The driver is easy to control with the Interlight Thinq app and can be linked to a sensor or placed in a group with multiple nodes. Thinq sensors and components are not dependent on a (wifi) network, but build their own wireless network together. A network with unlimited scalability, up to more than 10,000 nodes (network points). So applicable in small and very large buildings. A Thinq network can ' in addition to light control ' also provide a great deal of data to other systems in a building. And all this at a very low total cost of ownership, due to the great ease of installation and therefore significant savings in time, materials and errors. The Thinq drivers feature push-fit terminals for easy wiring connection. The driver is equipped with 3 dipswitch switches so that the output current can be selected. The driver is only connected to the power network, a wireless connection is made with the Thinq app. For more information, check out our Thinq page or see the comprehensive datasheet for all the driver's specifications. Note: This component requires constant current. More about Thinq



SPECIFICATIONS

Brand:	Interlight
Product type:	Driver
Dimmable:	Yes
Dimming programmable:	Yes
Housing:	Plastic housing
Suitable for outdoor use:	No
Suitable for constant current:	Yes
DIN rail mounting:	No
Suitable for constant voltage:	Yes
Output voltage:	14 - 42 V
Output Current:	250 - 600 mA
Suitable for direct voltage (primary side):	No
Output power:	13 - 28 W
Power Consumption:	28 W
Input voltage:	220 - 240 V
Frequency input voltage:	50 - 60 Hz
Efficiency:	84 %
Overload protection:	Yes
Emergency power supply system:	No
Overtemperature protection:	Yes
Ambient temperature:	-20 - 45 °C
Short circuit protection:	Yes
Max. number of fixtures per line protection switch B16:	48
Degree of protection (IP):	IP20
Max. number of fixtures per line protection switch C16:	55
Protection class according to IEC 61140:	II
Length:	125 mm
Operating device life:	7000 h

Width:	76 mm
Height:	30 mm

ACCESSORIES

Article	Description
IL-TWALL4B	Thinq Wireless Wall Switch EWSDB, 2 Buttons - 4 Functions
IL-TWALL2B	Thinq Wireless Wall Switch EWSDB, 1 Button - 2 Functions
IL-S50W	Connection cable 2x0.75mm2 50cm black for GST18i3
2811 020	Connecting cable 2.0m H03VVH2-F2x0.75mm2 black Euro 2.5A/250V

DOWNLOADS AVAILABLE FROM WEBSITE

Visit the Thinq website
Circuitbreaker
Datasheet